Control/Indication Housing – Inside Car

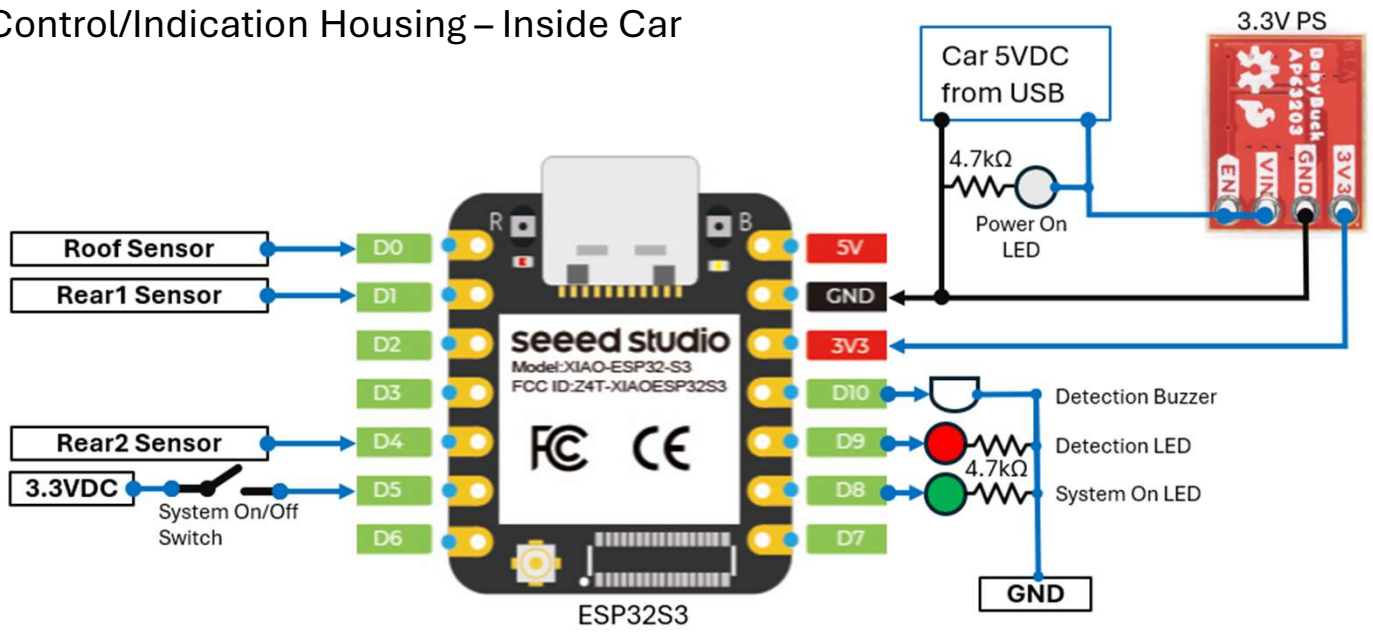

Rear Housing – Mounted Near License Plate

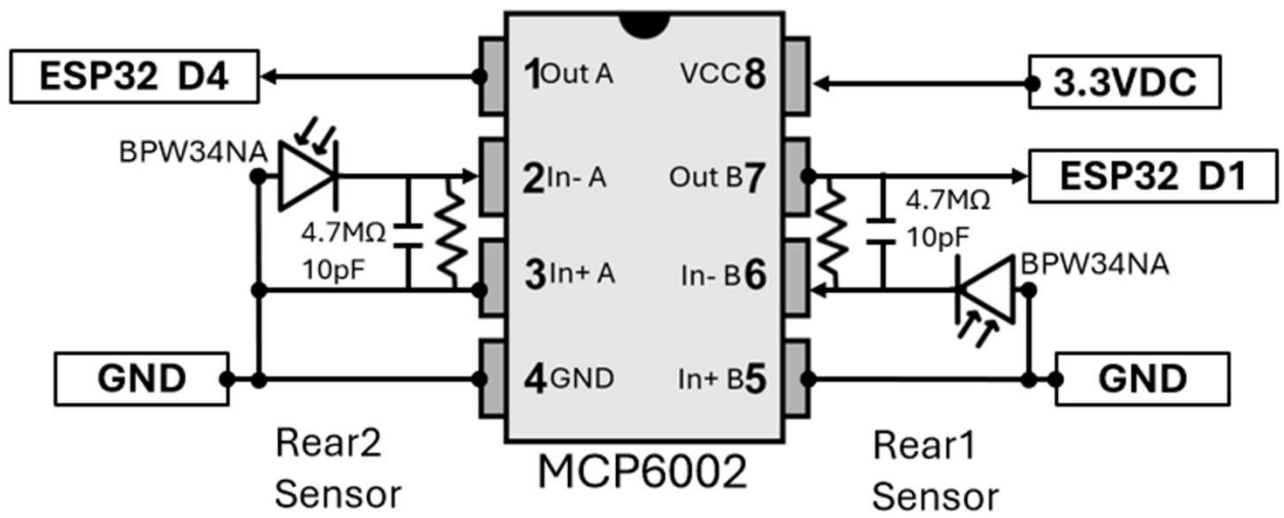

Roof Housing – Mounted on Roof or Upward-Angled Surface

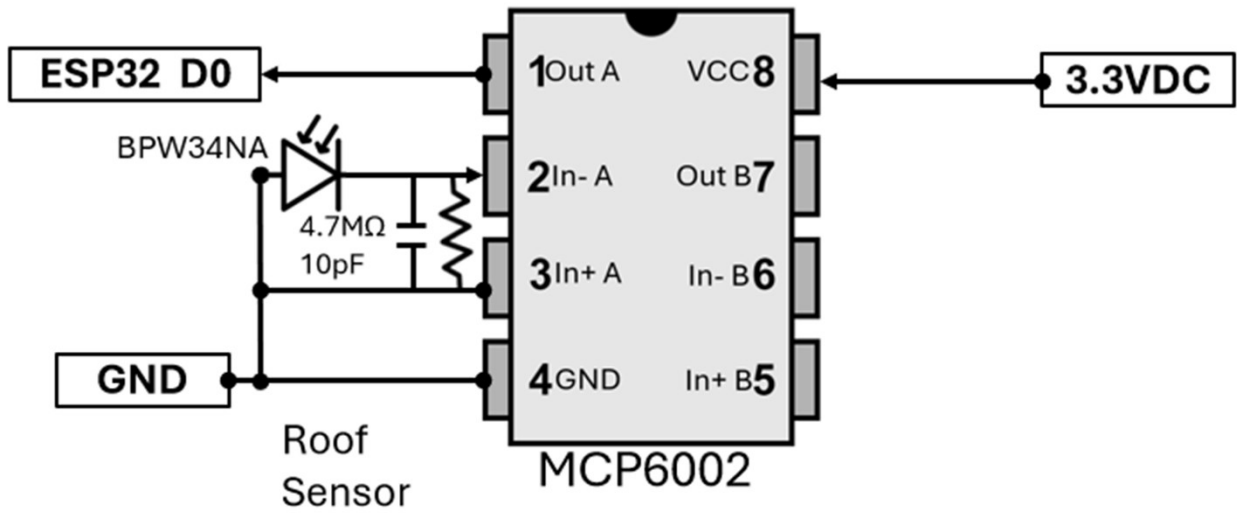

Parts List

Item	Qty	Description
Seeed XIAO ESP32 S3	1	ESP32 controller. Any ESP32 should do. This system also works on Arduinos with code adjustments.
AP63203 Sparkfun BabyBuck	1	5VDC to 3.3VDC voltage regulator
BPW34NA Photodiode	3	IR sensors. 1 or more. 3 are used here to cover a wider range (2 near the plate angled outwards, 1 angled upwards)
MCP6002 Op Amp	2	Amplifiers for IR sensor signals
4.7 Mohm resistors	3	Op-amp feedback RC
10 pF ceramic capacitors	3	Op-amp feedback RC
Indication LEDs - 5mm 20mA	3	1 ea white, green, red to indicate Power On, System On, Detection
4.7 kohm resistors	3	Current limiting resistors for indicator LEDs. Adjust for desired brightness.
Active buzzer	1	Detection indication buzzer. Any 3-12VDC active buzzer.
Switch	1	Turns system on/off. Any SPST toggle suitable for 5VDC+ should be fine.
Anytime Sign IR Magic Black Adhesive Mylar Sheeting	1	IR-pass filter media to cover the IR sensors and reduce interference from visible light.

Notes on Parts

- Add housings, wires, fuses, etc. as needed for your car. A single sensor/op amp housing has 3 wires, a double housing has 4.
- For single-sensor housings, I used 2” x 1” x 0.6” housings. These could be much smaller if a custom PCB was used. Cut a square hole the size of the BPW in the housing and solder the BPW to a board such that it protrudes slightly from the housing (for best detection angle). Seal around the back of the sensor using the a properly-rated sealant of your choice. Cover the face of the housing with the IR-pass mylar media. The media will bulge outwards slightly over the sensor – a second layer can be added if you’re concerned about strength. I found that the media actually widens the detection range, possibly by scattering IR light that arrives at a sharp angle to the sensor face.
- This version is powered from a 5VDC USB port in the car. It could be powered from 12VDC as well, though more filtering may be required.
- The BPW34NA has a wide viewing angle (130° at half sensitivity), but that won’t cover the entire rear of the car. This system includes 2) BPWs near the license plate, angled slightly outward. A third is in a separate housing angled upward (could also be roof-mounted) to better detect high-mounted cameras, and to reduce headlight washout. I think a single sensor mounted near the plate could also work.
- The sensor housings should be outside the car; I found that the factory window tint blocked IR too effectively for reliable detection. The BPW sensors and MCP op-amps should be installed together to avoid interference, with power and signal wires run inside the car.
- The IR-pass mylar media isn’t critical, but it reduces interference from visible light and acts as a protecting/sealing layer for the outside housings.